Software Defined…

Martijn Doedens - SecureLink

Business Demands Everything NOW

“Software Defined is about concealing complexity. Software Defined hides all of the difficult parts of management behind a facade of simple GUI goodness.”

Define Software Defined

- Separate Control plane and Data plane entities;
- Intelligence and state are logically centralized;
- The underlying infrastructure is abstracted from the applications;
- Execute or run Control plane software on general purpose hardware;
- Decouple from specific hardware;
- Have programmable data planes;
- Maintain, control and program data plane state from a central entity;
- An architecture to control not just a device but an entire network.

Examples

Software Defined Network

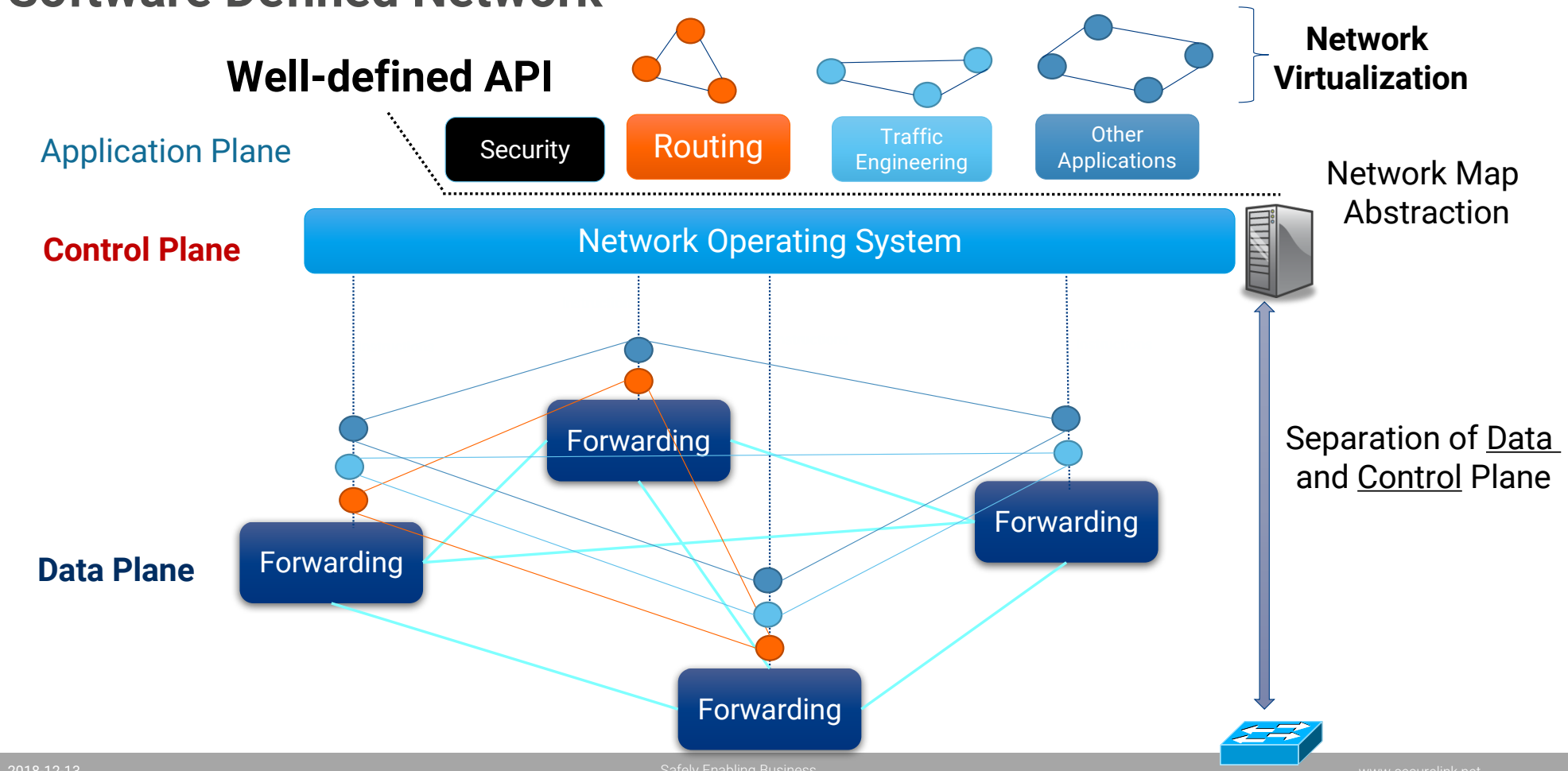

Software Defined WAN

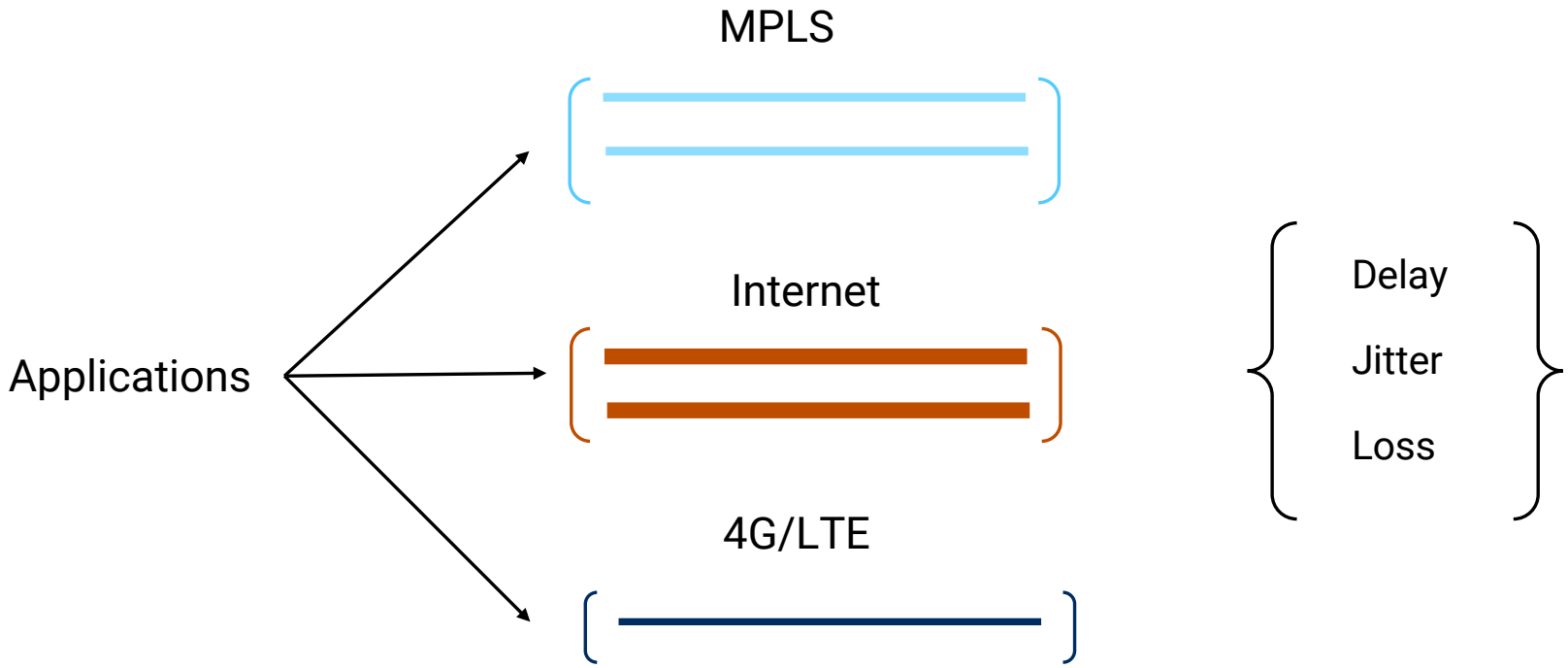

1. Use application categories, for e.g. Business Critical, Voice, Best-Effort

2. Configure path preference and fallback options per application category

3. Configure SLA parameters per user & application category

So…

- Marketing
- Policy-based
- Decouples control plane and data plane
- Cloud
- API
- Orchestration

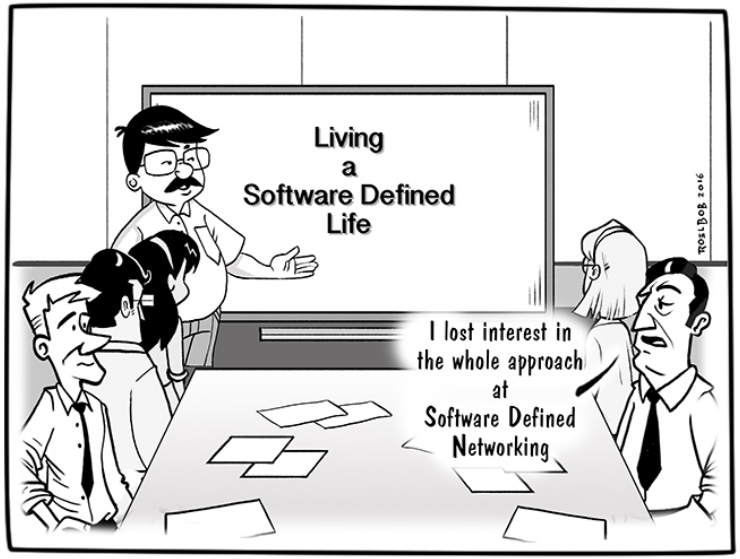

Now what?

Orchestration

- Business processes & service levels to policies
- Automation
- Sensing and responding to changes

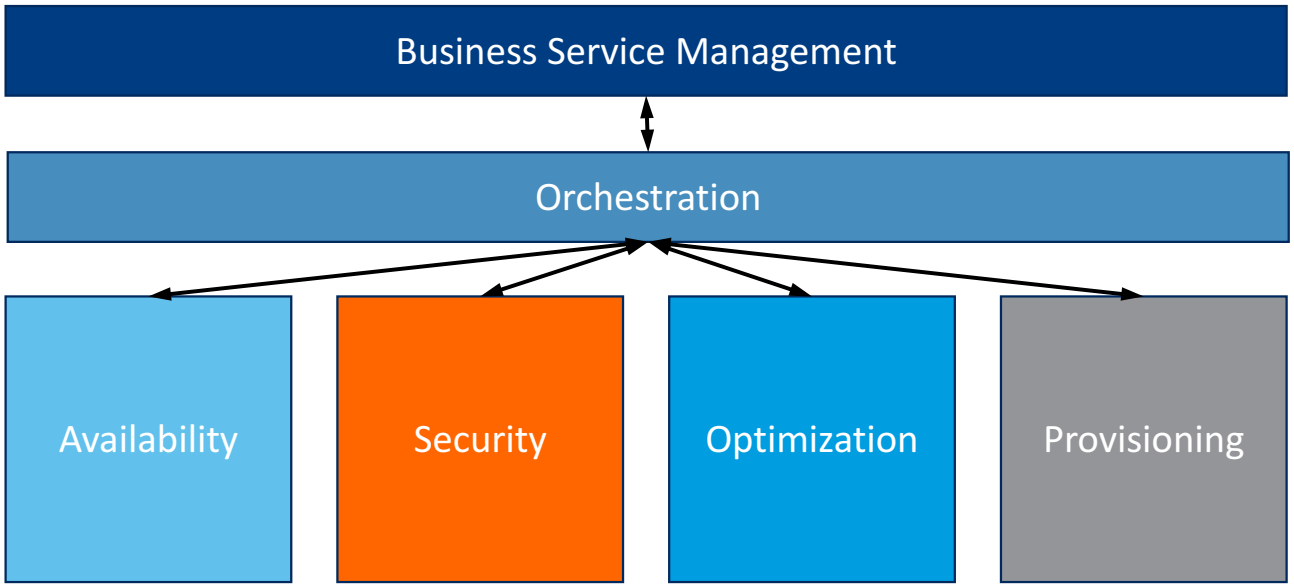

Q & A